JUAL

OVERFLOW RING – STAINLESS STEEL



PRODUCT DESCRIPTION

JUAL Overflow Ring – Stainless steel

TÜVRheinland®
Precisely Right.
TÜV Rheinland-tested.
Certified in accordance with EN 1253.

APPLICATIONS:
Used for outlets where an elevated water level is required before drainage.
Are typically used for safety outlets.

Overflow rings with two O-ring groves are reversible, so the water level can be 25 or 35 mm respectively.

Note that small amounts of water may enter the roof outlet even though rainwater has not reached the predefined overflow level. If a completely watertight connection is required JUAL recommends applying an MS sealer on the adjoining surfaces.

MATERIALS:
Stainless steel EN 1.4301 / AISI 304
EPDM O-ring

APPROVALS

Overflow Ring – Stainless steel is approved according to EN1253, LGA-Certificate no. 57215060.

ARTICLE NUMBERS

TYPE	OVERFLOW RING DIM. (mm)			ARTICLE NUMBER
	D1 (fits for outlet Ø)	H1	H2	
JUAL Overflow Ring – Stainless steel (reversible)	75	25	35	220012-075
	90	25	35	220012-090
	110	25	35	220012-110
	125	25	35	220012-125
	160	25	35	220012-160
JUAL Overflow Ring – Stainless steel (fixed)	110	25	50	220012-50-110

TECHNICAL INFORMATION

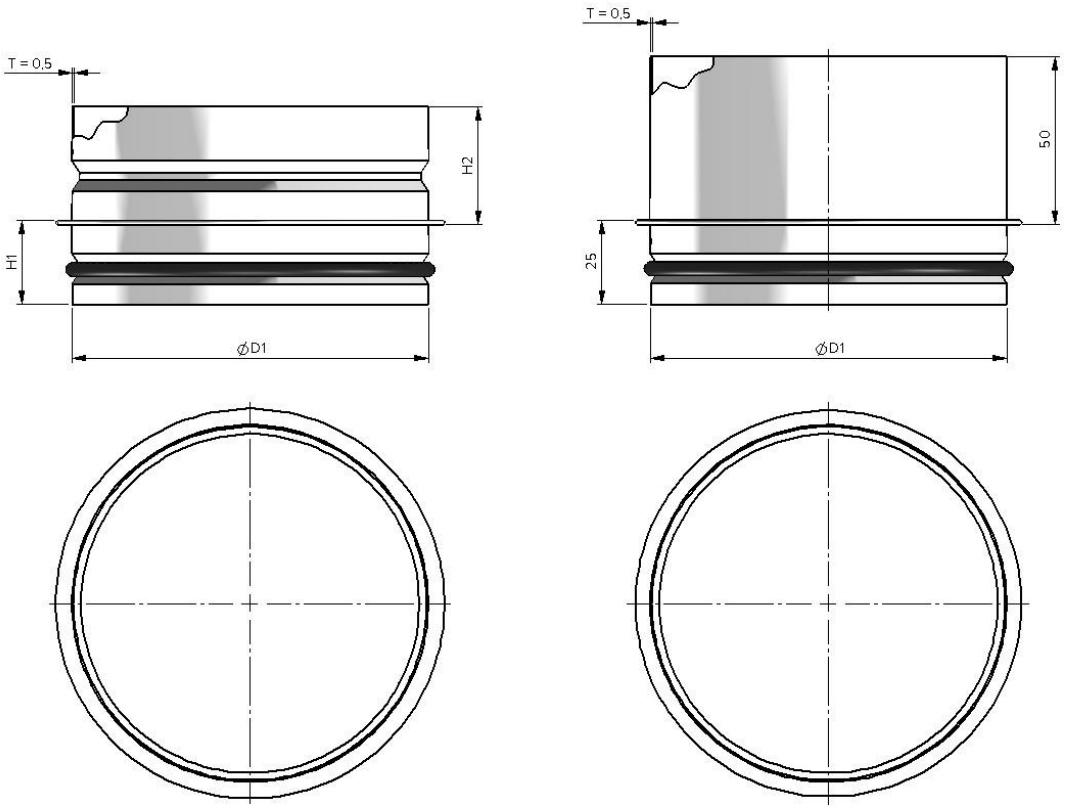

Please also see datasheet of JUAL Overflow Ring in EPDM material.